6JXX6 Yagi

Item		Q.ty	Item		Q.ty
Stainless steel nut M5		6	Stainless steel bolt M5x40		2
Stainless steel nut M6		1	Stainless steel bolt M5x45		2
Stainless steel nut M8		7	Stainless steel Eyescrew M5		2
Lock washer 8 mm Ø		7	Stainless steel bolt M8x35		2
Flat washer 8 mm Ø		7	Stainless steel bolt M8x90		2
Lock washer 5 mm Ø		6	Stainless steel Turnbuckle		2
Lock washer 6 mm Ø		1	Stainless steel bolt M6x35	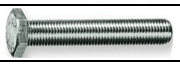	1
Flat washer 6 mm Ø		1	Stainless steel bolt M4x20		6
Lock washer 4 mm Ø		6	Stainless steel parker screw 3.5x9.5		11
Stainless steel nut M4		6	Plate **PIA40JXX**		1
Section boom **A** 25 mm Ø	115 cm.	1	Plate **PIA00JXX**		1
Section boom **A - B** 30 mm Ø	115 cm.	1	Semi-element Ø 12 mm		12
Section boom **B - C** 35 mm Ø	115 cm.	1	Dipole Hairpin and balun ISO30D_12		1
Section boom **C - D** 40 mm Ø	115 cm.	1	Insulator ISO25_12		2
Section boom **D - E** 35 mm Ø	115 cm.	1	Insulator ISO30_12		1
Section boom **E - F** 30 mm Ø	115 cm.	1	Insulator ISO35_12		2
Section boom **F** 25 mm Ø	115 cm.	1	Inbuss key 3 mm		1
Dacron rope front	320 cm.	1	Hairpin	155 mm	1
Dacron rope back	260 cm.	1			

Total Field EZNEC+

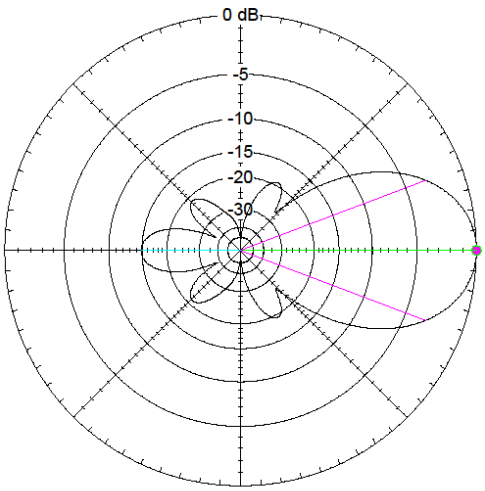

Dipole in free space 50,1 MHz

Azimuth Plot		Cursor Az	0,0 deg.
Elevation Angle	0,0 deg.	Gain	12,41 dBi
Outer Ring	12,41 dBi		0,0 dBmax
			0,0 dBmax3D
3D Max Gain	12,41 dBi		
Slice Max Gain	12,41 dBi @ Az Angle = 0,0 deg.		
Front/Back	14,82 dB		
Beamwidth	41,4 deg.; -3dB @ 339,3, 20,7 deg.		
Sidelobe Gain	-2,41 dBi @ Az Angle = 180,0 deg.		
Front/Sidelobe	14,82 dB		

Total Field EZNEC+

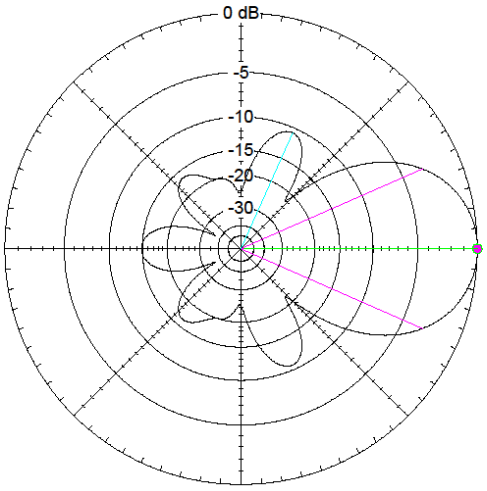

Dipole in free space 50,1 MHz

Elevation Plot		Cursor Elev	0,0 deg.
Azimuth Angle	0,0 deg.	Gain	12,41 dBi
Outer Ring	12,41 dBi		0,0 dBmax
			0,0 dBmax3D
3D Max Gain	12,41 dBi		
Slice Max Gain	12,41 dBi @ Elev Angle = 0,0 deg.		
Front/Back	14,82 dB		
Beamwidth	47,4 deg.; -3dB @ 336,3, 23,7 deg.		
Sidelobe Gain	1,78 dBi @ Elev Angle = 66,0 deg.		
Front/Sidelobe	10,63 dB		

IØJXX may vary them without any warning

Made in Italy

Combine the boom respecting the letters placed at the ends of each section
Insert the screws M5x35 mm washer and nut into the junction points **A - A** and **D - D** then insert the screws M5x40 mm washer and nut, junction points **B - B** and **C – C**

Combinez le boom sur les lettres placées aux extrémités de chaque section
Insérez les vis M5x35 mm rondelle et un écrou dans les points de jonction **A - A** et **D – D** puis, insérer les vis M5x40 mm rondelle et un écrou, les points de jonction **B - B** et **C – C**

Kombinieren Sie den Boom und achten Sie dabei auf die Buchstaben am Ende jeder Sektion
Fügen Sie die Schrauben M5x35 mm Unterlegscheibe und Mutter in die Verbindungsstellen **A - A** und **D - D**, und die Schrauben M5x40 mm Unterlegscheibe und Mutter in den Knotenpunkte **B - B** und **C – C**

Unire il boom rispettando le lettere poste alle estremità di ogni singola sezione
Inserire le viti M5x35 mm rondella e dado, nei punti di giunzione **A - A** e **D - D**, inserire le viti M5x40 mm rondella e dado, nei punti di giunzione **B - B** e **C - C**

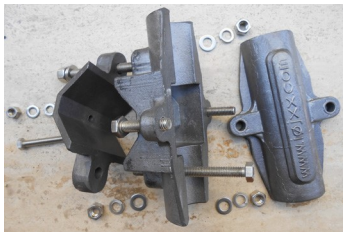

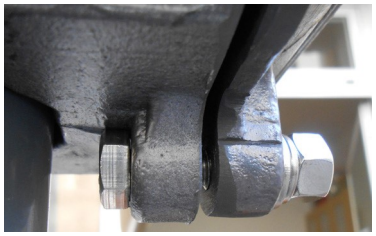


Attach the mounting plate between boom and mast **PIA40JXX** between elements **3 – 4**

Montieren Sie die Montageplatte zwischen Ausleger und Mast **PIA40JXX** zwischen den Elementen **3 – 4**

Fixez la plaque de montage entre la flèche et le mât **PIA40JXX** entre les éléments **3 – 4**

Montare la piastra di fissaggio tra boom e mast **PIA40JXX** dietro l'elemento **3**


Insert elements as shown in the figure spaced apart and balanced (as shown in the figure) with the elements standing under the boom, in order to avoid ponding, ice accretion and snowdrift

Fügen Sie die Elemente räumig und zentriert hinein und fügen Sie sie mit den Elementen unter dem Boom zusammen, wie in der Abbildung dargestellt (siehe Abbildung). Das sollte die Anhäufung von Wasser, Eis und Schnee verhindern.

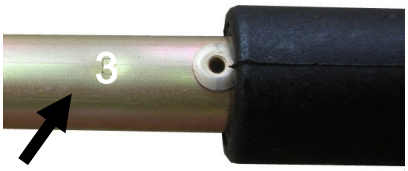

Insertion d'éléments comme indiqué sur la figure (voir la figure) spatial et centré avec les éléments placer sous le boom, comme ça on peut éviter cumulus d'eau, de glace et de neige

Inserire gli elementi come riportato in foto e spaziati centro-centro (vedi figura), con gli elementi sotto al boom, in modo da evitare l'accumulo di acqua, ghiaccio e neve

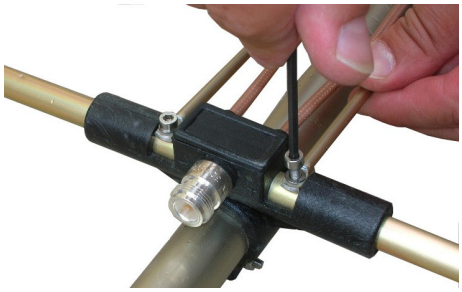

Match the dipoles as shown in the figure

Verbinden Sie die Dipole wie abgebildet

Installez les dipôles comme représenter

Montare il dipolo come indicato in figura

Stacking

In order to obtain the best results in coupling the antennas, we warmly recommend an adequate antenna stacking calculation which would allow the best forward gain together with low side lobes. The stacking distance may be calculated with the following formula from Güenter Hoch DL6WU
On the basis of further studies conducted by Lionel VE7BQH over the antenna stacking argument, a reduction of 5÷10% may be introduced on stacking distances without noticing significant overall worsening of the characteristics. Do respect the driven element supplying simmetry to allow anti-phase coupling

$$\textbf{Plane E} = 38.8° = \frac{5982}{2 * \sin(41.4 / 2)} = \frac{5982}{0.7069} \cong \textbf{8.46 m} \text{ (with VE7BQH from } \textbf{8.04 m} \text{ to } \textbf{7.62 m}\text{)}$$

$$\textbf{Plane H} = 43.6° = \frac{5982}{2 * \sin(47.4 / 2)} = \frac{5982}{0.8039} \cong \textbf{7.46 m} \text{ (with VE7BQH from } \textbf{7.07 m} \text{ to } \textbf{6.7 m}\text{)}$$

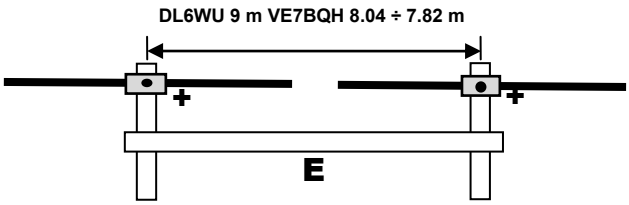

$$d = \frac{L}{2 * \sin(\Phi / 2)}$$

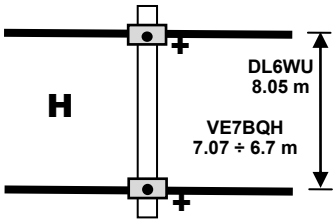

Made in Italy

6JXX6

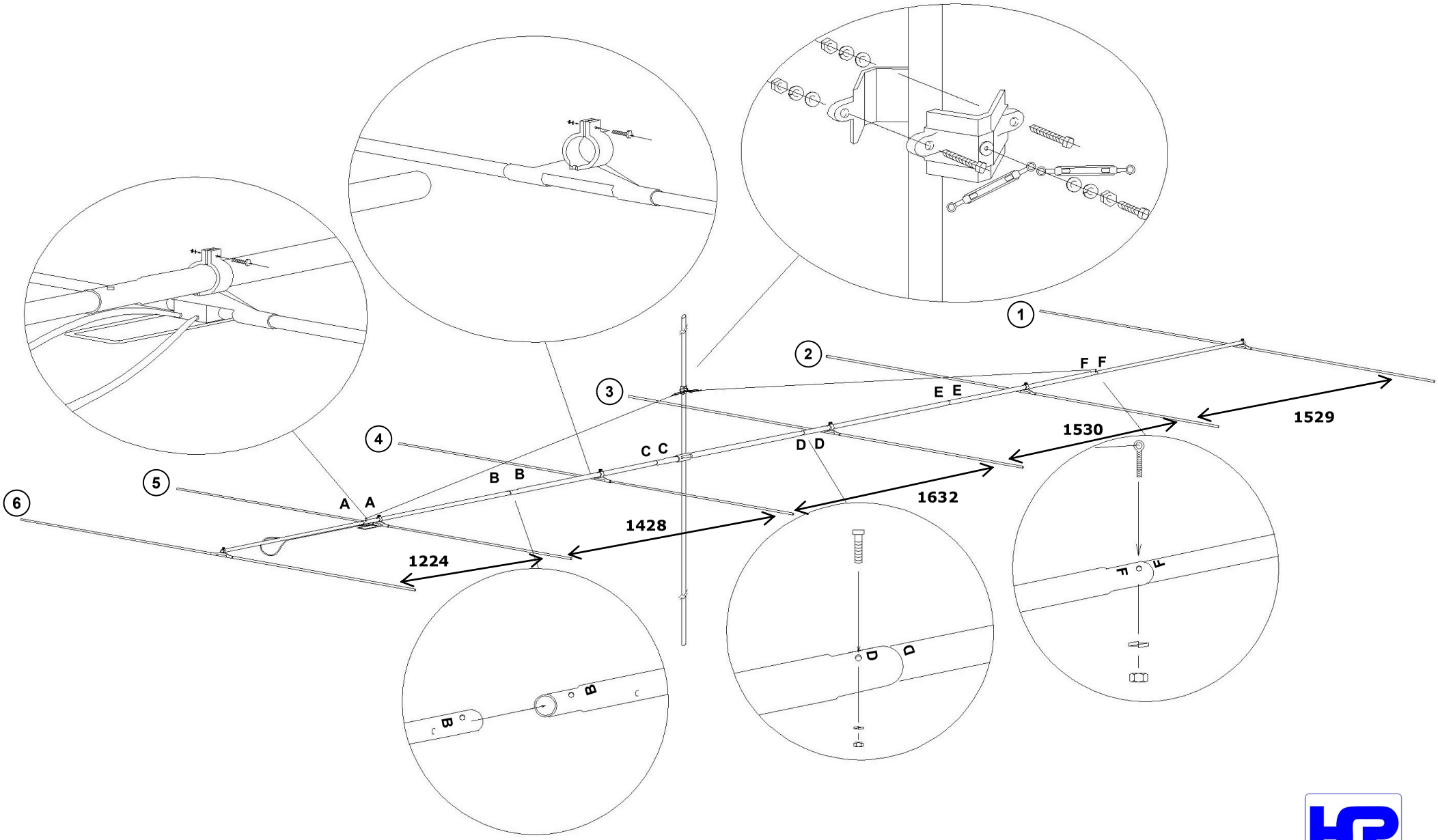

IØJXX may vary them without any warning

Made in Italy

www.hspshop.it

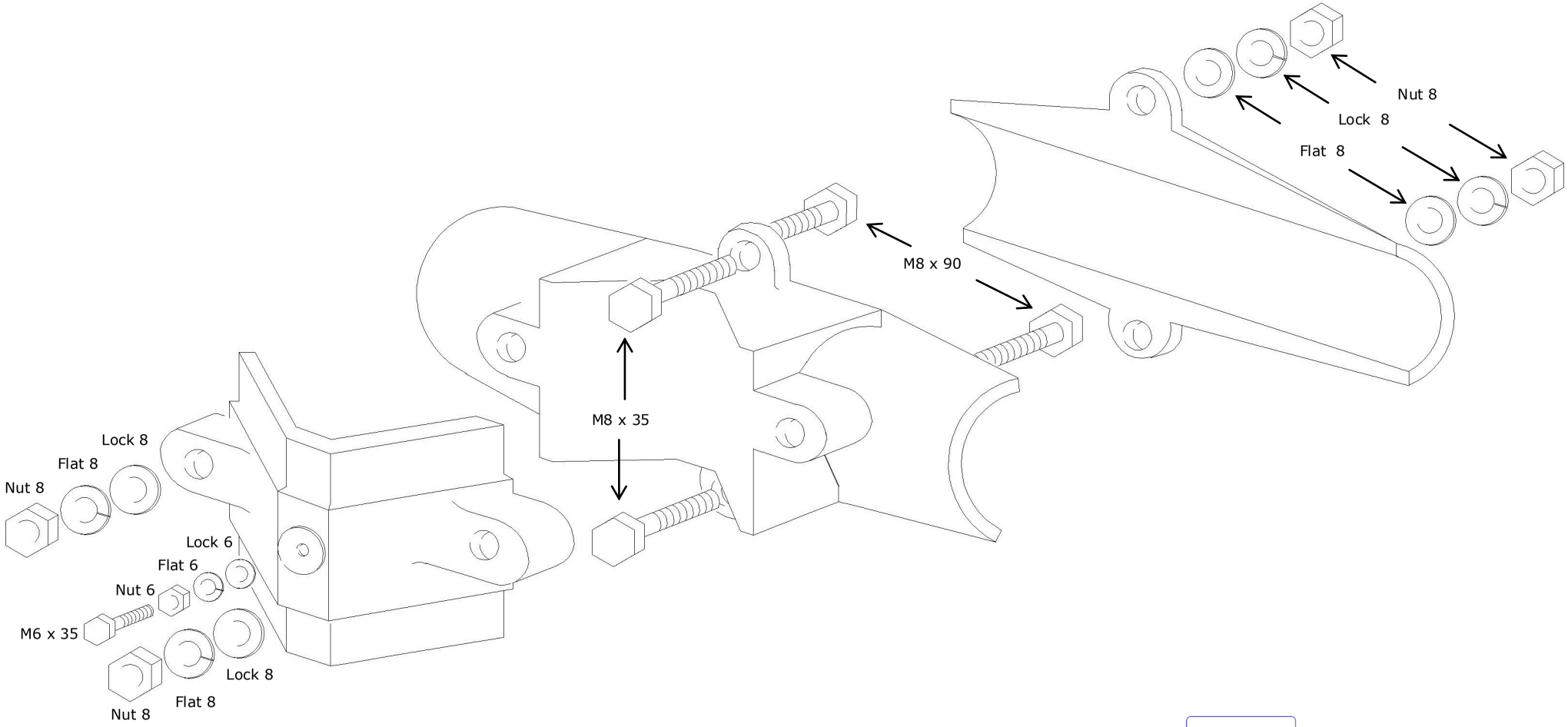

IØJXX may vary them without any warning
Made in Italy